WILCO DRYWALL TOOLS, INC.
1122 Siddonsburg Road
Mechanicsburg, PA 17055
717-766-4594

55-00 Flat Finisher Handle
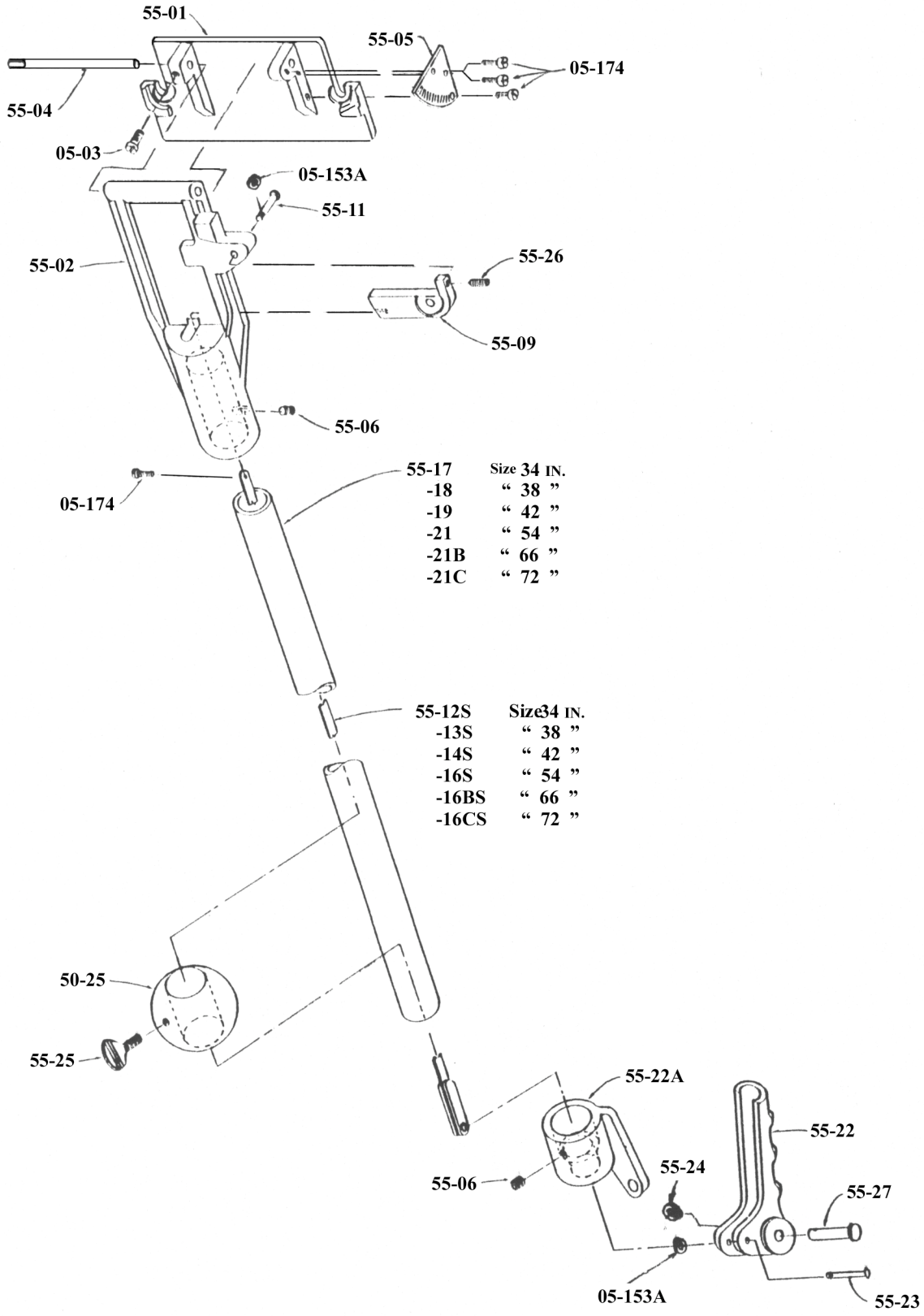
NOTE:
When Ordering Parts Give
Description & Part Number.